RoHS2.0
Compliant

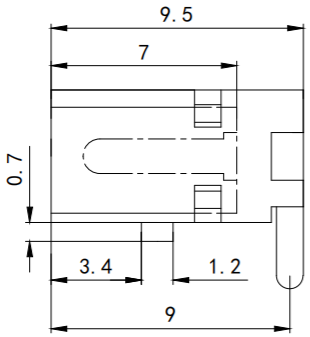

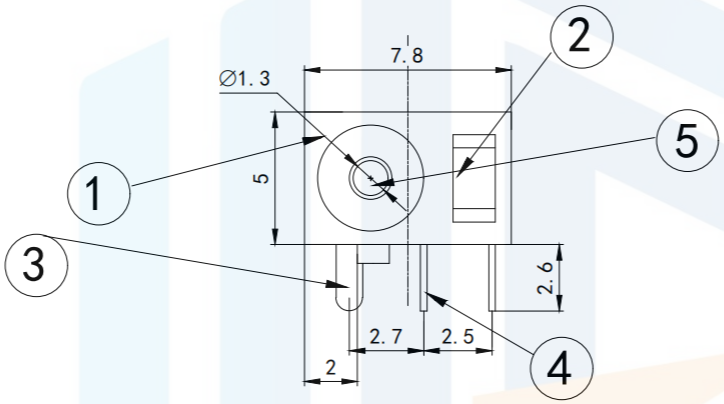

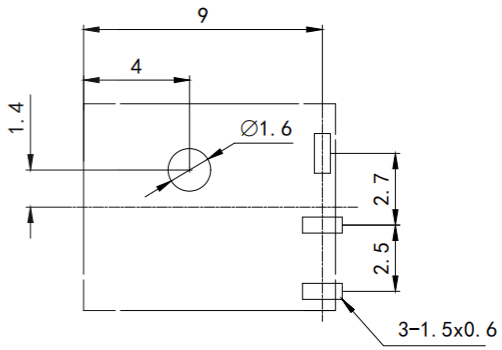

The size of the circuit board cutout

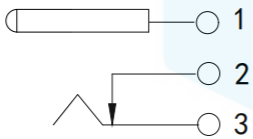

Schematic diagram of the circuit

Technical requirements
1. Rated load: DC 30V 0.5A
2. Contact resistance: ≤0.03 Ω
3. Insulation resistance: ≥100Ω DC250V
4. Withstand voltage: AC 500V(50Hz)/min
5. Insertion force: 3~20N
6. Mechanical life: 5000 times

TOLERANCE	
X.XXX	±0.05
X.XX	±0.15
X.X	±0.20
X.	±0.30
ANGLE	±5.0°

PROTECTON

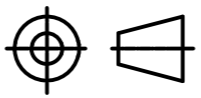

东莞市恒祺电子科技有限公司
Dongguan Hengqi Electronic Technology Co., Ltd

https://www.hq-dz.com phone:15812872448

TITLE: DC电源插座

PART NO:DC-006B

DRAWING NO:9.5*7.8*5

DRAWN:		DATE:	18-10-08	UNIT: mm
CHECKED:		DATE:	18-10-08	SCALE: FULL
APPROVED:		DATE:	18-10-08	SIZE: A4