RoHS2.0 Compliant

H
2.5
2.8
3.5
4.0
4.6

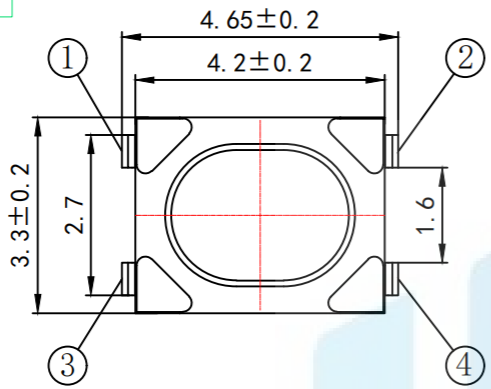

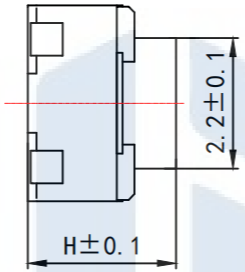

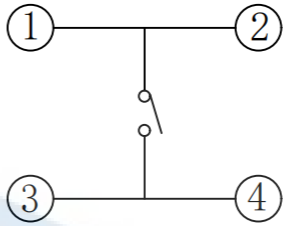

电 路 图

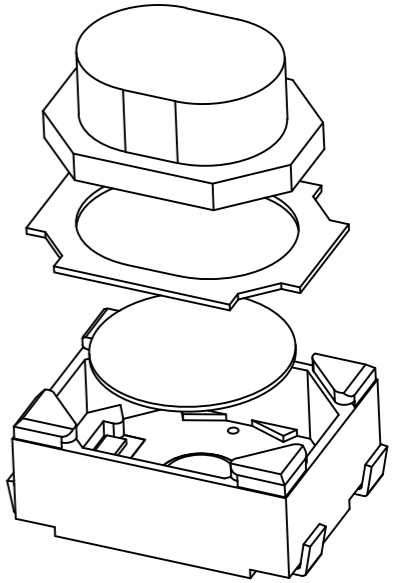

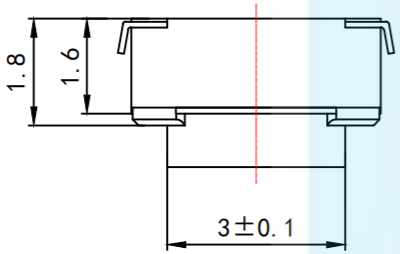

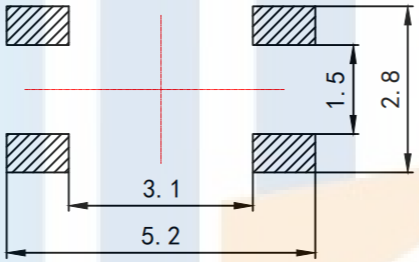

PCB. 焊接图

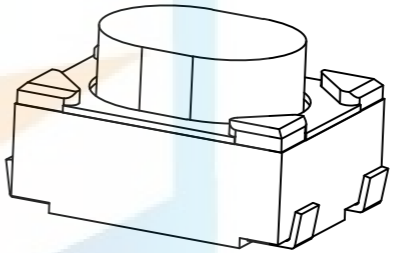

Key Technical Specifications:

1. Rating: 50mA DC12V
2. Contact resistance: ≤100mΩ
3. Operating force:160±40gf&250±40gf
4. Itinerary: 0.20±0.1mm
5. Insulation resistance: ≥100MΩ
6. Electrical strength: 250V 50HZ 1Min.
7. life span: 500,000 Cycles

TOLERANCE	
X.XXX	±0.05
X.XX	±0.15
X.X	±0.20
X.	±0.30
ANGLE	±5.0°

PROTECTON

东莞市恒祺电子科技有限公司
Dongguan Hengqi Electronic Technology Co., Ltd

https://www.hq-dz.com phone:15812872448

TITLE: 轻触开关

PART NO:HQ-TS-A016

DRAWING NO:3*4*H U脚

DRAWN:		DATE:	18-10-08	UNIT: mm
CHECKED:		DATE:	18-10-08	SCALE: FULL
APPROVED:		DATE:	18-10-08	SIZE: A4